Installation Manual

Impaq S / Impaq SC & Impaq S Grade 3

INS877-4

Texecom

10-03-2022	• Changed details for sensitivity settings description and tables inline with PCR01407 • PCR01350 updated PCB schematics and wiring details to accommodate PCB changes.
18-10-2022	• Impaq S Grade 3 added to the manual.

Texecom

Content

1.0 Introduction 4
1.1 Impaq S 4
1.2 Impaq SC 6
1.3 Impaq S Grade 3 8
2.0 Mounting 10
2.1 Device mounting 10
2.2 Magnet mounting (type SC only) 13
3.0 Impaq S and S Grade 3 wiring configuration 16
4.0 Impaq SC wiring configuration 20
5.0 LED functionality 22
6.0 Setting the shock sensitivity 23
7.0 Specifications 24
8.0 Legal Information 25

1.0 Introduction

The Impaq S is a Grade 2 wired shock sensor, the Impaq SC is a Grade 2 wired shock sensor with the option for a magnetic contact, and the Impaq S Grade 3 is a Grade 3 shock sensor.

Sections 1.1 and 1.2 and 1.3 show the key parts of the devices.

1.1 Impaq S

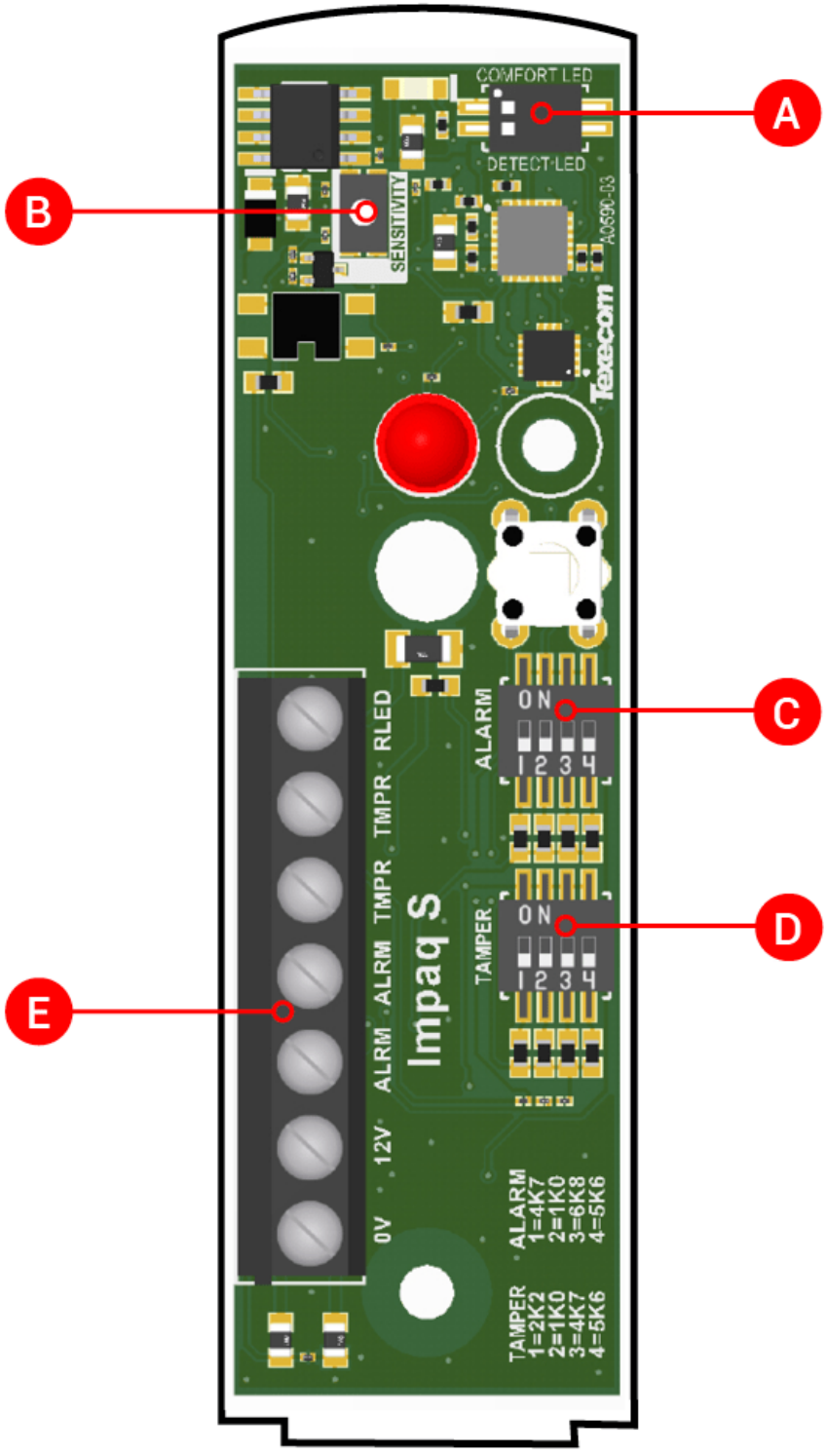
A
B
C
D
E
COMFORT LED
DETECT LED
SENSITIVITY
A0590-03
Texecom
ON
1 2 3
ALARM
TAMPER
Impaq S
0V 12V ALRM ALRM TMPR TMPR RLED
ALARM
1=4K7
2=1K0
3=6K8
4=5K6
TAMPER
1=2K2
2=1K0
3=4K7
4=5K6

Icon	Item
A	LED function select DIP switch
B	Sensitivity selection button
C	Alarm resistance value selection DIP switch
D	Tamper resistance value selection DIP switch
E	Input terminal block

1.2 Impaq SC

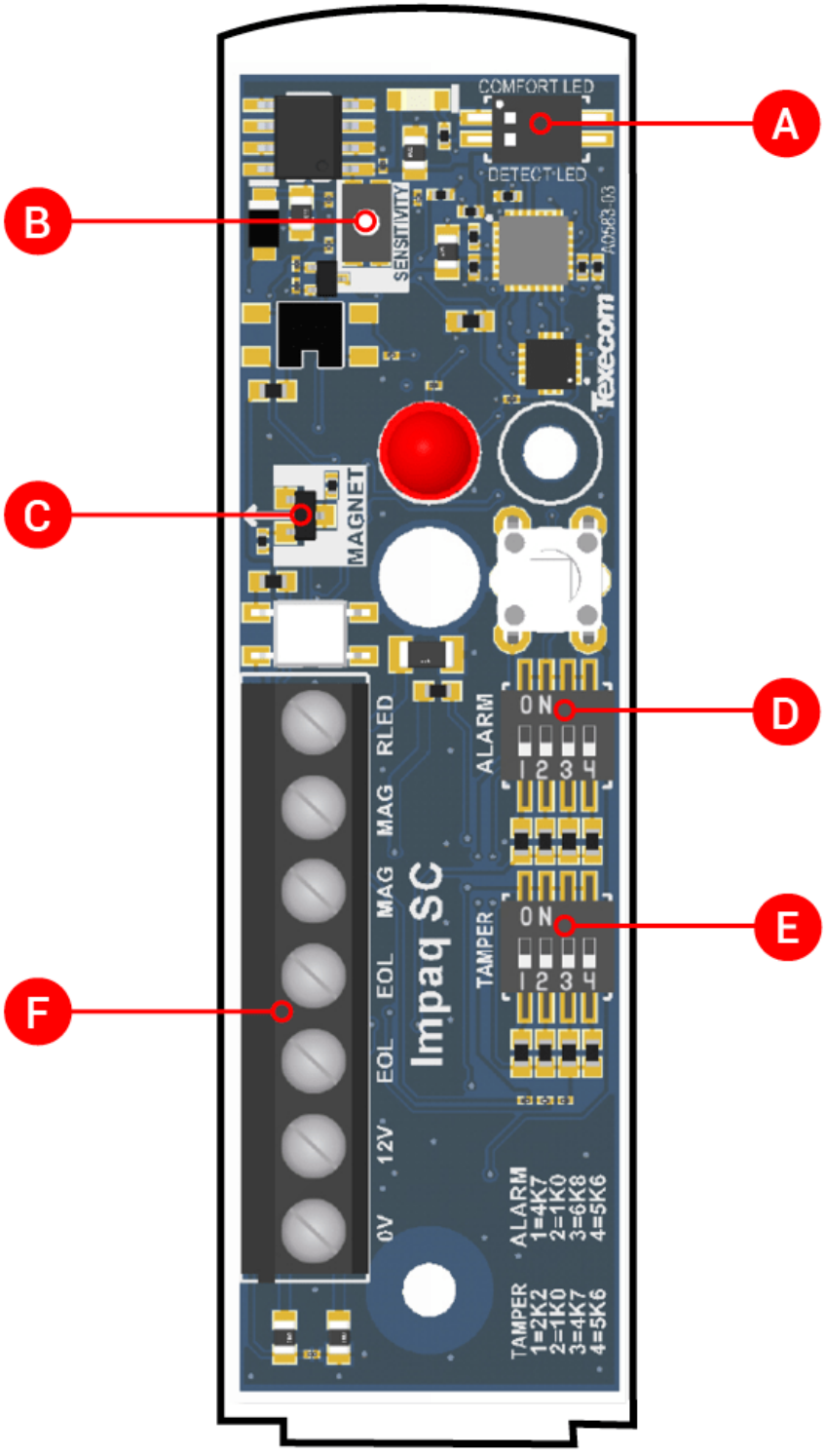
A
B
C
D
E
F
COMFORT LED
DETECT LED
SENSITIVITY
MAGNET
Texecom
A0583-03
ON
1 2 3
ALARM
TAMPER
RLED
MAG
MAG
EOL
EOL
12V
0V
Impaq SC
ALARM
1=4K7
2=1K0
3=6K8
4=5K6
TAMPER
1=2K2
2=1K0
3=4K7
4=5K6

Icon	Item
A	LED function select DIP switch
B	Sensitivity selection button
C	Magnet sensor
D	Alarm resistance value selection DIP switch
E	Tamper resistance value selection DIP switch
F	Input terminal block

1.3 Impaq S Grade 3

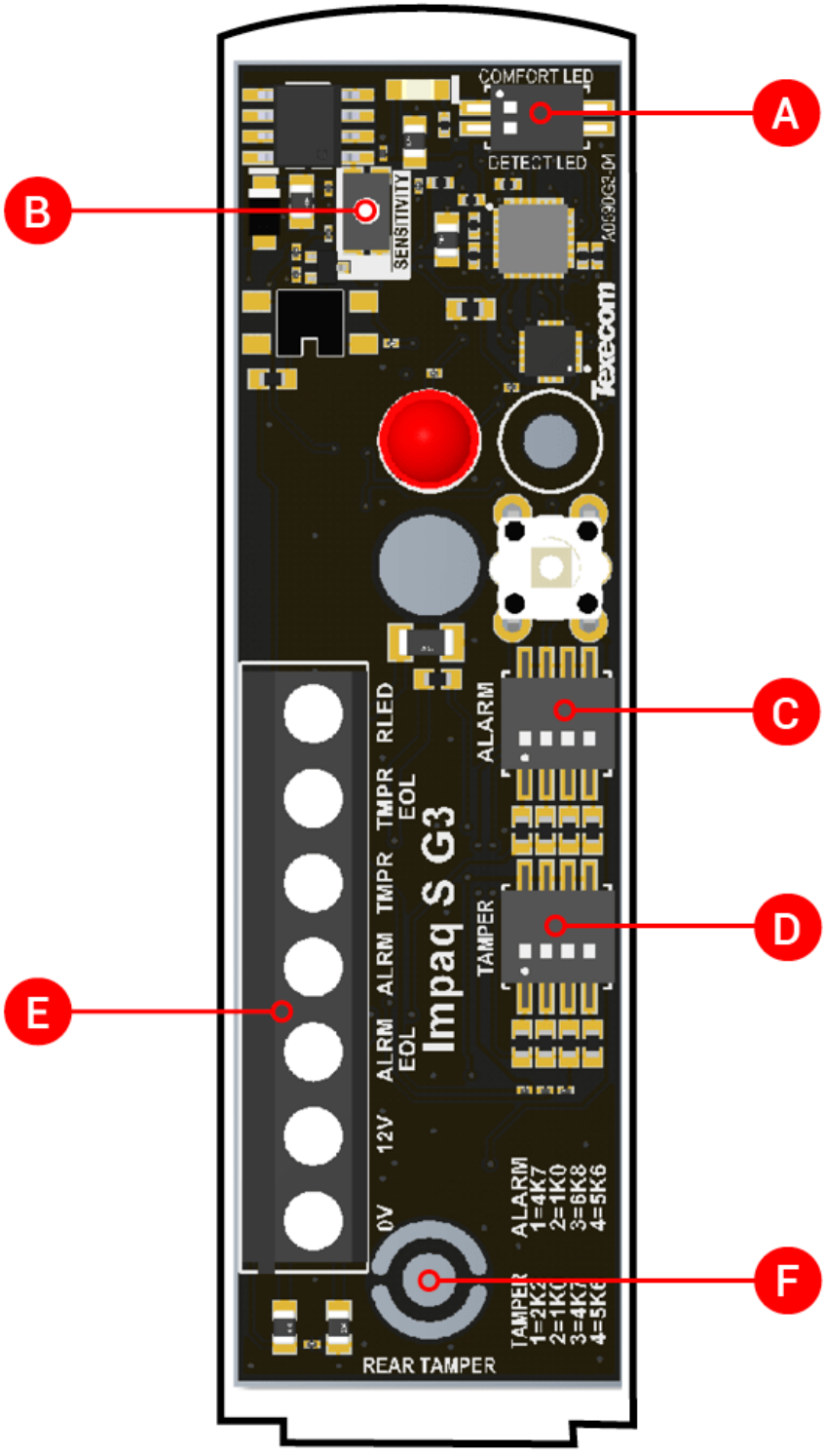
A
B
C
D
E
F
COMFORT LED
DETECT LED
SENSITIVITY
Texecom
RLED
TMPR
EOL
ALARM
TMPR
ALRM
TAMPER
Impaq S G3
ALRM
EOL
12V
0V
ALARM
1=4K7
2=1K0
3=6K8
4=5K6
REAR TAMPER

Icon	Item
A	LED function select DIP switch
B	Sensitivity selection button
C	Alarm resistance value selection DIP switch
D	Tamper resistance value selection DIP switch
E	Input terminal block
F	Removal from mounting breakout

2.0 Mounting

2.1 Device mounting

Select the intended mounting position. The device can be installed in any mounting orientation.

- Open the device cover and remove the PCB using a screwdriver (see figure 1)
- Remove the cable knockouts (see figure 2)
- **To ensure product compliance with EN50131**, fix the base onto the mounting surface (see figure 3) using the following screw type:
    - Head Type: Counter Sunk flat head
    - Head Diameter: 5.3-6.8mm
    - Screw Diameter 2.9-3.2mm
    - Screw length: 15.8-24.5mm
- Impaq S Grade 3 **MUST** use the fixing points shown in **RED** on Fig 3 for the removal from mounting tamper to function correctly.
    - *Care should be taken when screwing through the PCB for the rear tamper breakout. Overtightening the screw could cause the PCB tracks to break and leave the device permanently in tamper. This is not reversible and the PCB will need to be replaced.*

NOTE 1: If the product is mounted on concrete, suitable wall plugs should be used.
NOTE 2: If installing the Impaq SC the same screw types should be used to mount

the magnet.

Figure 1

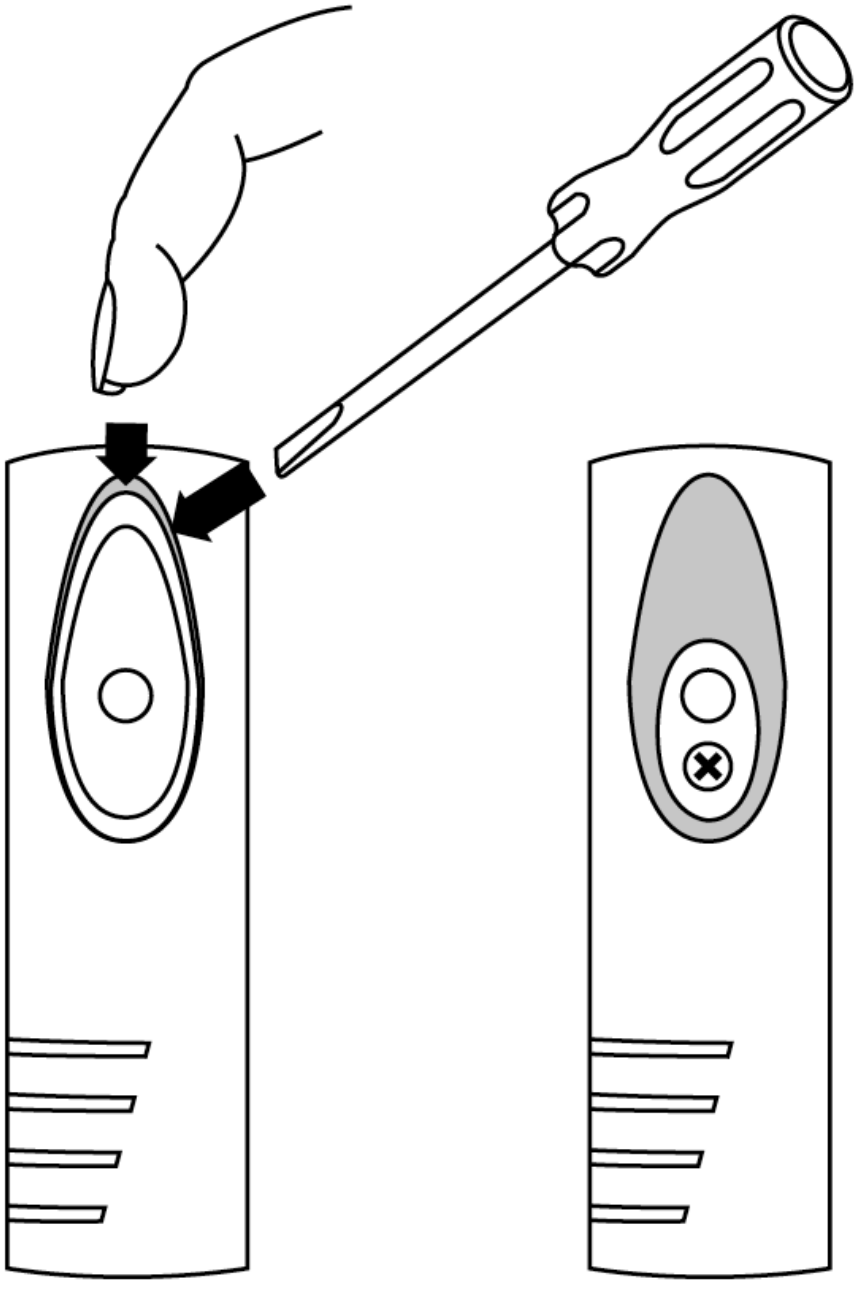

Figure 2

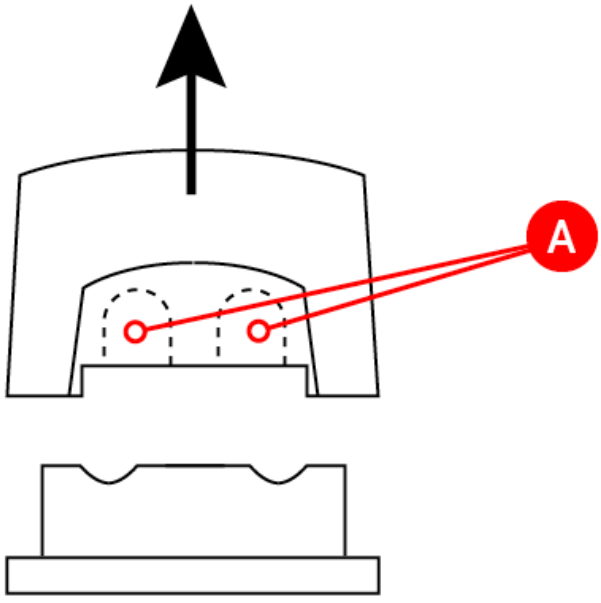

Figure 3

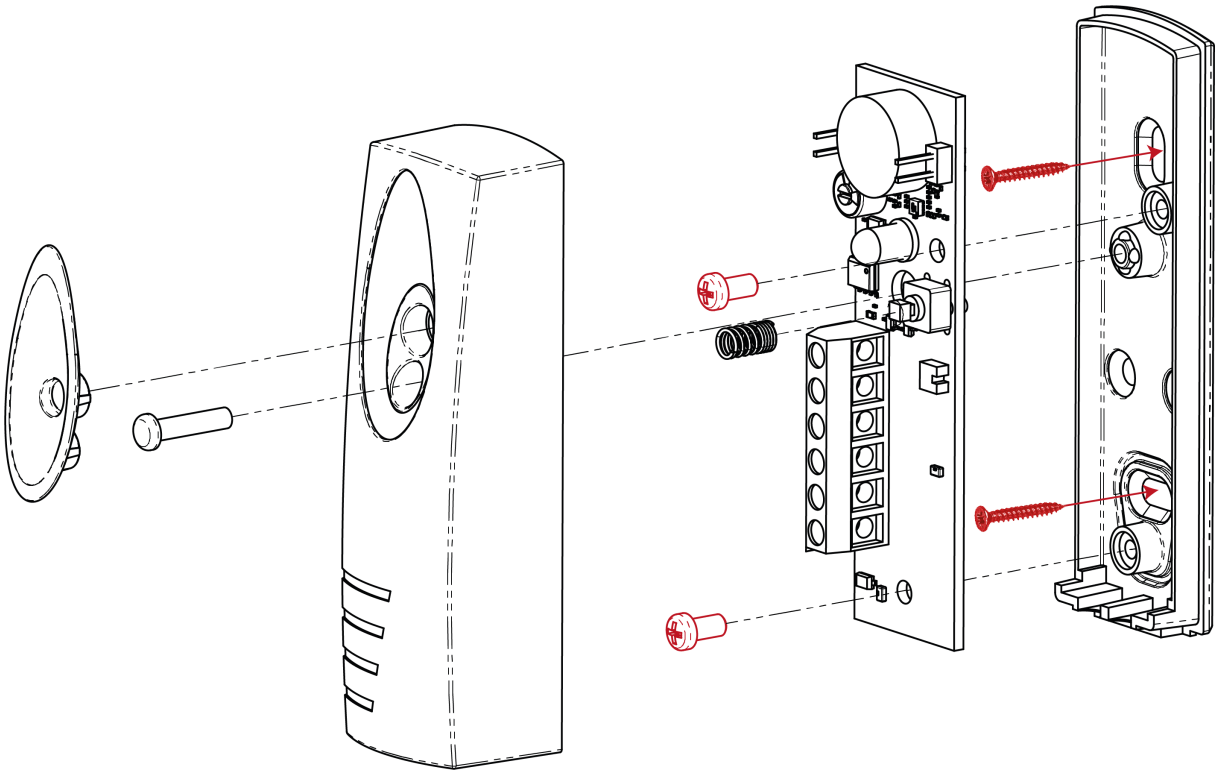

2.2 Magnet mounting (type SC only)

- Once the device has been mounted, position the magnet so the notch is aligned with the arrow marker on the PCB.
- The magnet can be installed on either side of the device. Greater sensitivity is achieved by positioning the magnet so the notch is aligned with the arrow (see figure 4 for magnet distances).

Figure 4

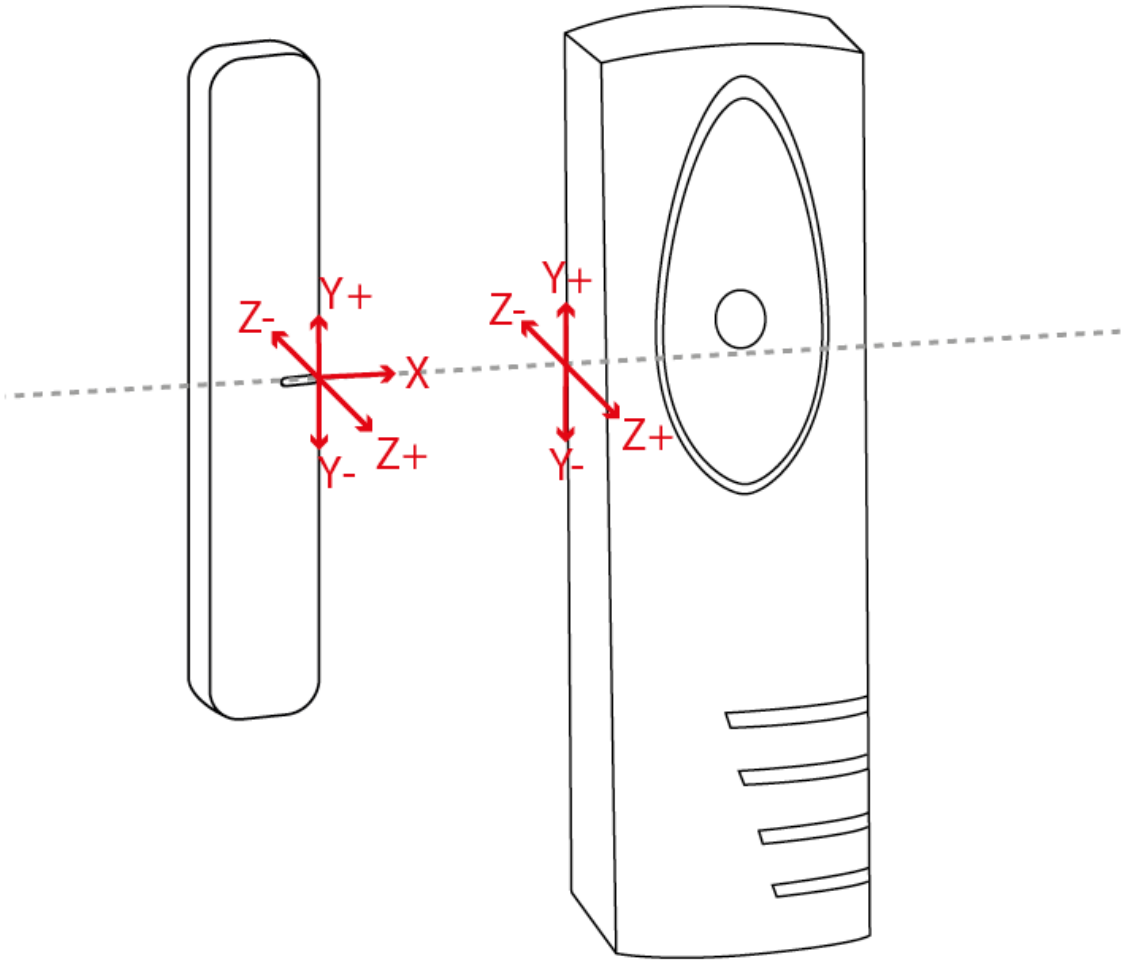

	Axis	Approach Min (mm)	Removal Max (mm)
Right	X	20	27
	Y+	6	7
	Y-	4	6
	Z+	42	49
	Z-	35	42

Left	X	35	42
	Y+	5	7
	Y-	5	6
	Z+	43	46
	Z-	35	40

Once the correct position has been located fix the magnet in place (see figure 5).

Figure 5

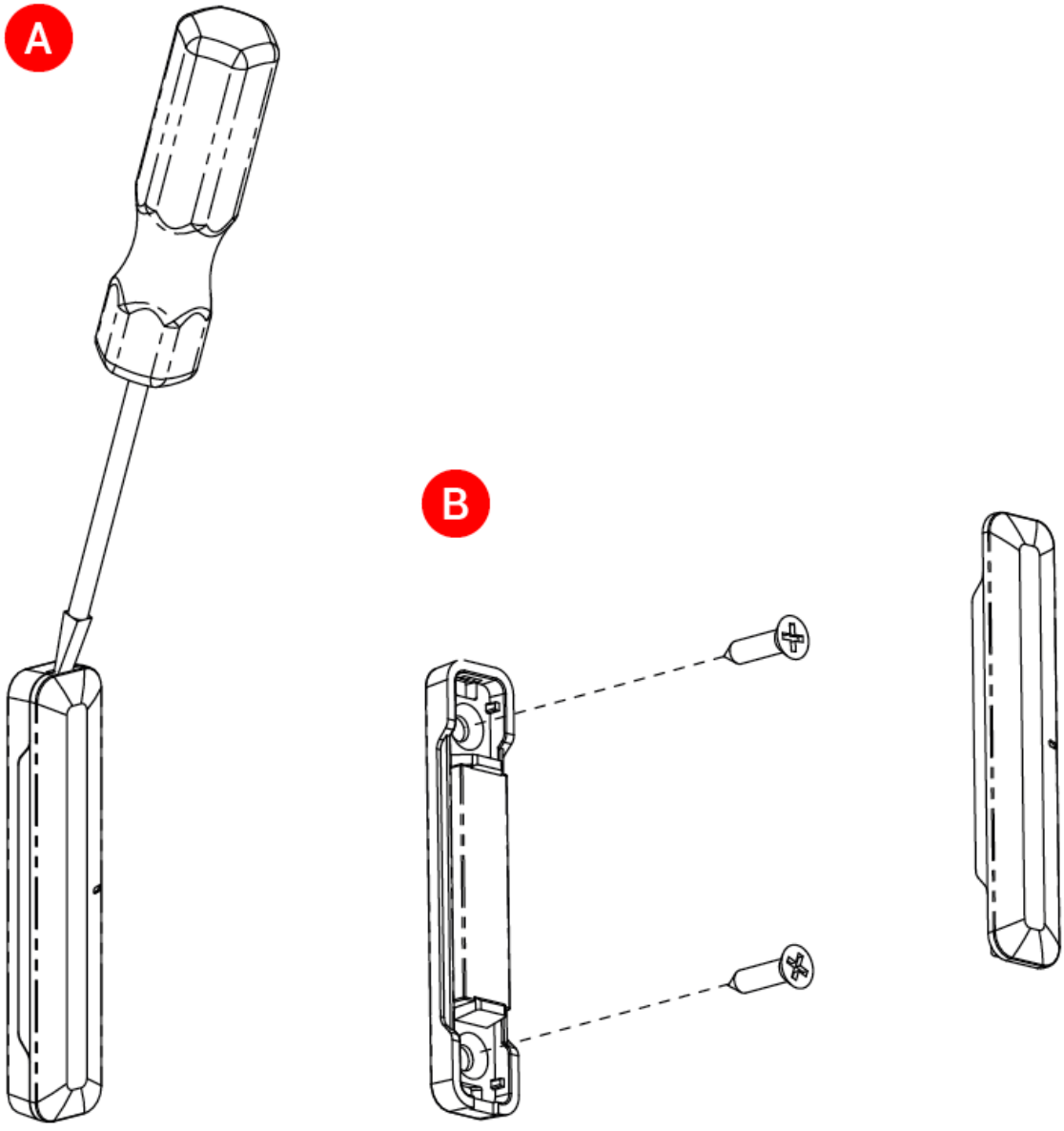

3.0 Impaq S and S Grade 3 wiring

configuration

The Impaq S and S Grade 3 have three wiring options.

In all cases, power should be provided to the 0V and 12V by an EN50131 compliant power supply.

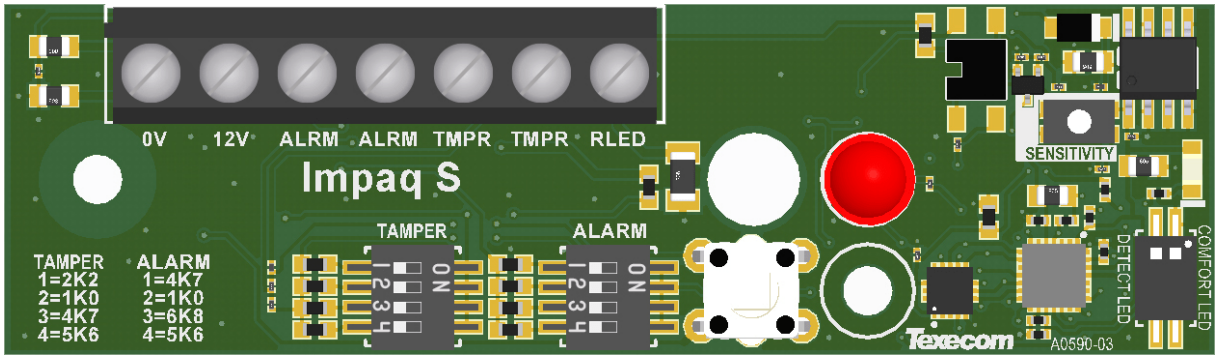

Option 1
The alarm and tamper loops can be wired independently and function as normally closed zone inputs.
Note: that the EOL DIP switches should all be turned OFF in this configuration

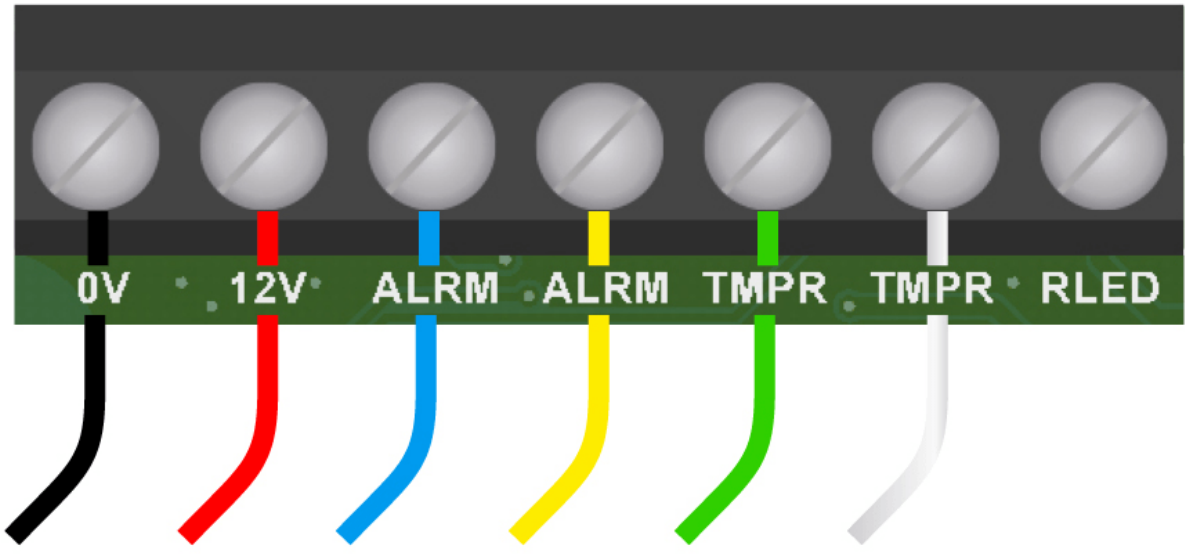

Option 2

The Impaq S can also be wired with leaded resistors in an EOL configuration. The alarm resistor should be connected across the alarm terminals, and the tamper resistor should be connected from the right-hand alarm terminal to the left-hand tamper terminal.

The zone wires should be connected to the outer alarm and tamper terminals.

Note: the EOL DIP switches should all be turned OFF in this configuration

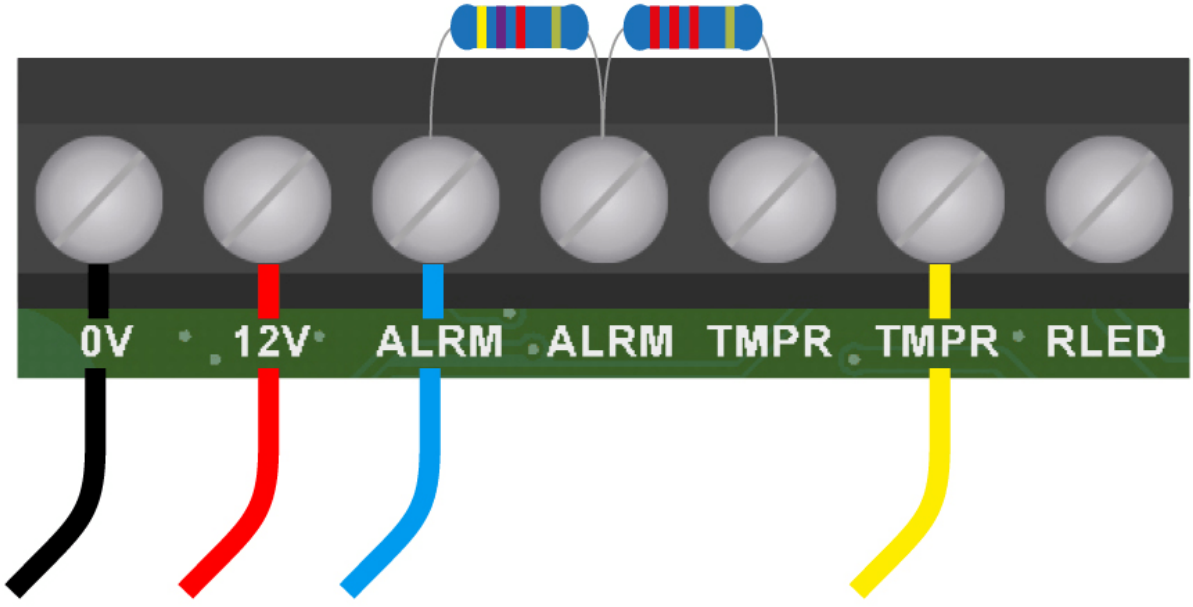

Option 3

The third way of wiring an Impaq S is to use the EOL DIP switch selected resistors for alarm and tamper.

In this configuration. The zone wires should then be connected to the outer alarm and tamper terminals.

The EOL DIP switches should be set to the required zone EOL configuration.

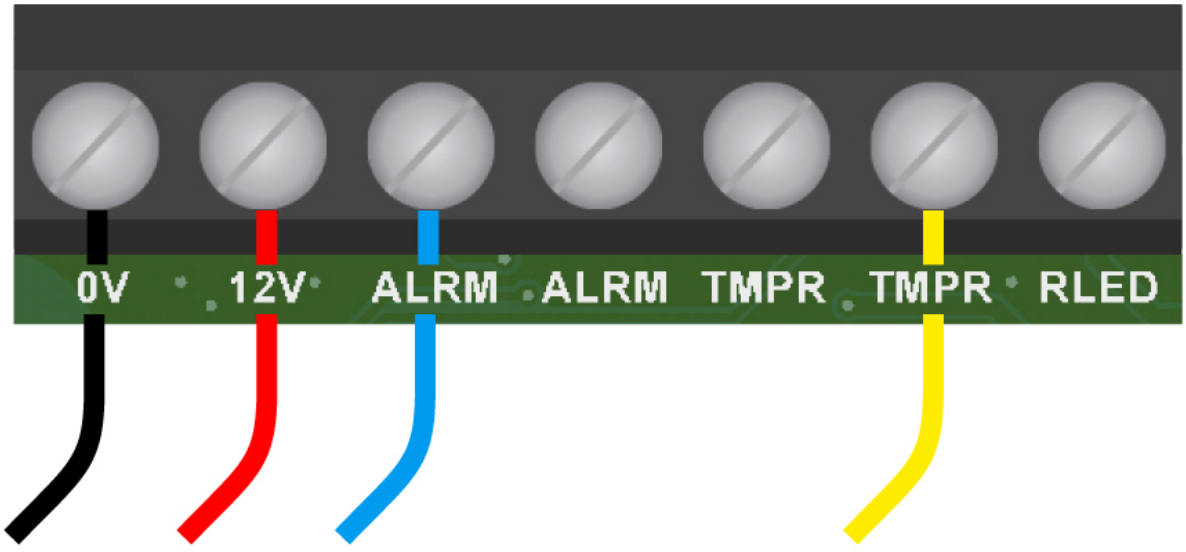

Select the correct resistance value for Tamper and Alarm by moving the DIP switch to the ON position (Texecom values shown in example below).

EOL DIP Switch Position	Tamper	Alarm	Manufacturer
1	2K2	4K7	Texecom
2	1K0	1K0	Honeywell
3	4K7	6K8	Scantronic/Menvier
4	5K6	5K6	DSC

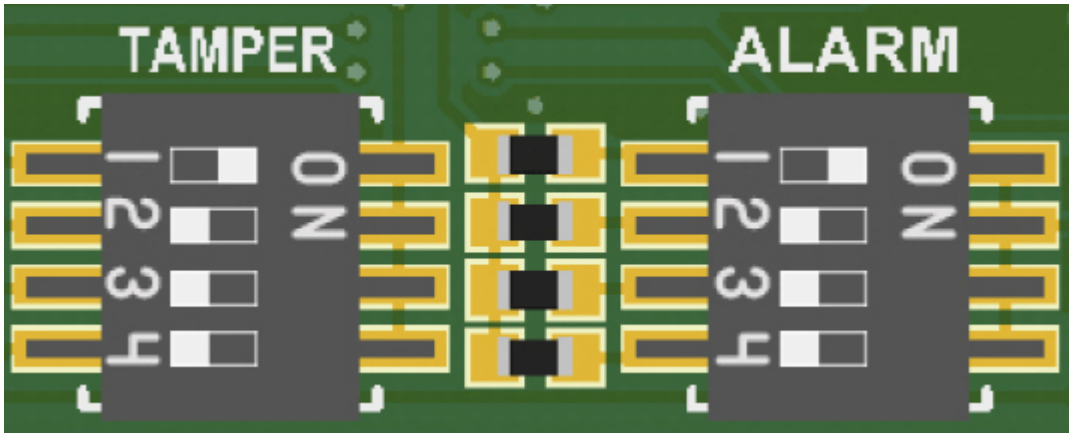

NOTE: The product will only function if both DIP switches have a single switch set to the ON position. If multiple switches are moved, the product will not function as expected.

Optional wiring

There is a facility to remotely enable the walk test LED from the panel. To use this connect a wire from the RLED terminal to an output of the panel.

NOTE: This overrides the LED DIP Switch settings.

4.0 Impaq SC wiring configuration

The Impaq SC has only one wiring option

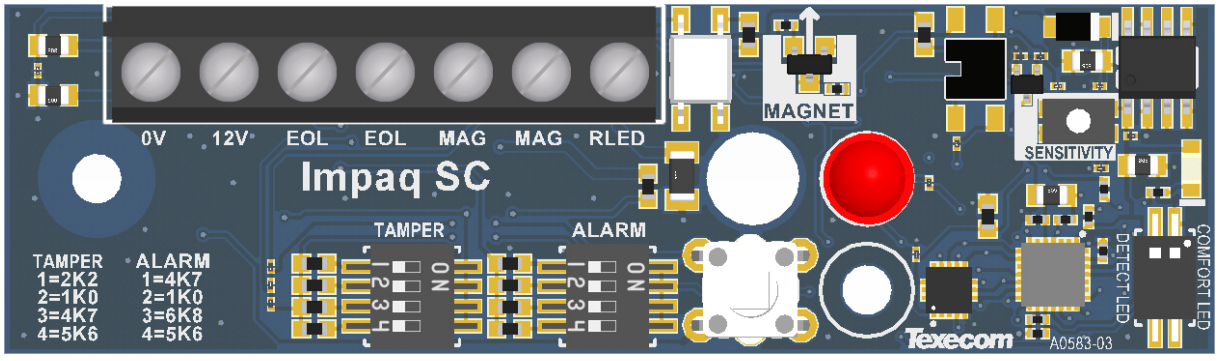

The Impaq SC's only wiring option is EOL via DIP switches. The zone wires should be connected to the EOL terminals, and the required EOL resistor options should be chosen on the EOL DIP switches.

Connect two cores into the terminals marked MAG for the alarm signals from the magnetic contact.

Note: The shock and contact functions must be wired as two separate zones in the panel.

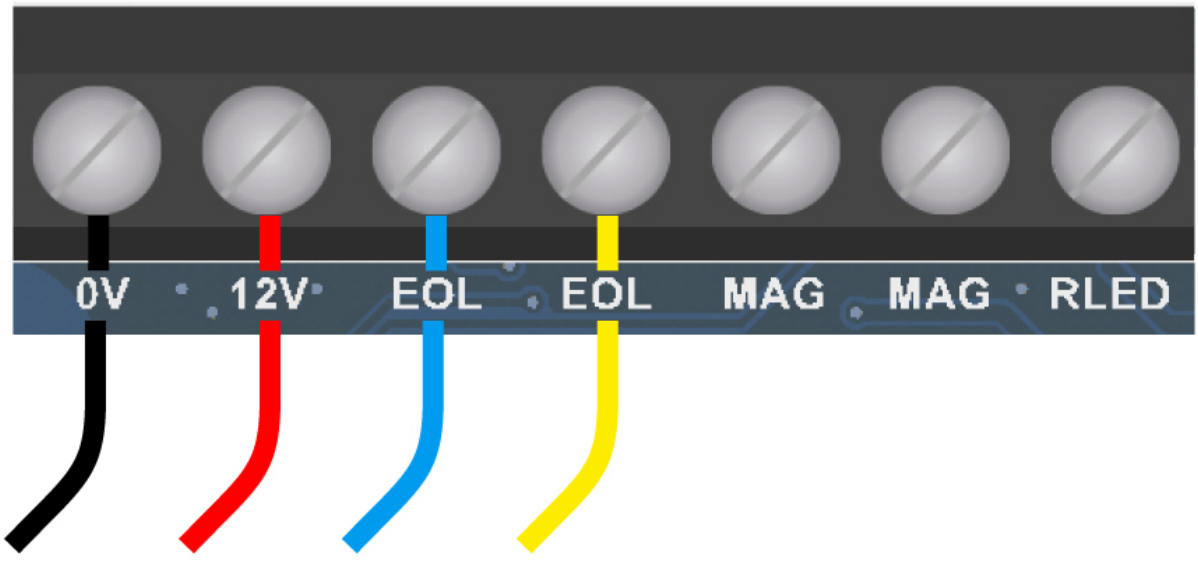

Select the correct resistance value for Tamper and Alarm by moving the DIP switch to the ON position (Texecom values shown in example below).

EOL DIP Switch Position	Tamper	Alarm	Manufacturer
1	2K2	4K7	Texecom
2	1K0	1K0	Honeywell
3	4K7	6K8	Scantronic/Menvier
4	5K6	5K6	DSC

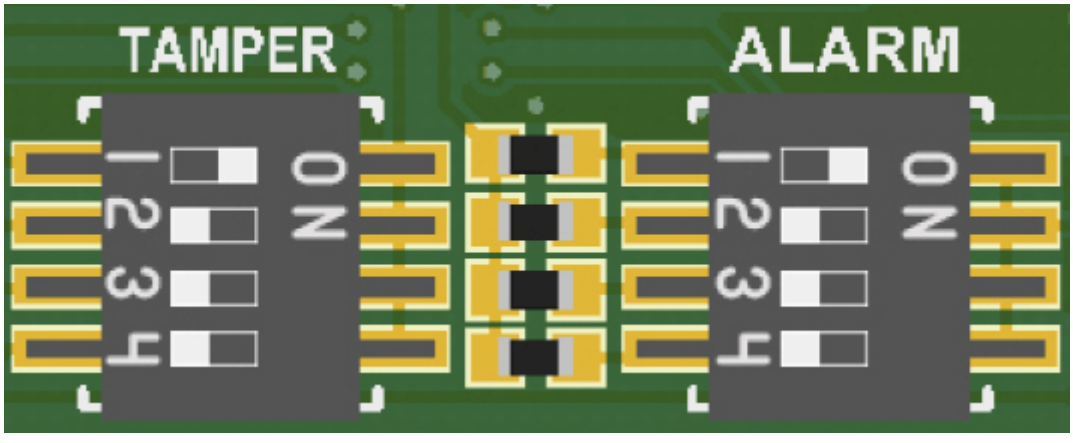

NOTE: The product will only function if both DIP switches have a single switch set to the ON position. If no switches or multiple switches are moved, the product will not function as expected.

Optional wiring

There is a facility to remotely enable the walk test LED from the panel. To use this, connect a wire from the RLED terminal to an output of the panel.

NOTE: This overrides the LED DIP Switch settings.

5.0 LED functionality

LED	Colour Indication	How to Select
Comfort	Green every 6 seconds	Move switch 1 to the ON position
Detection	Red every time a detection occurs	Move switch 2 to the ON position

Example selection shown here:

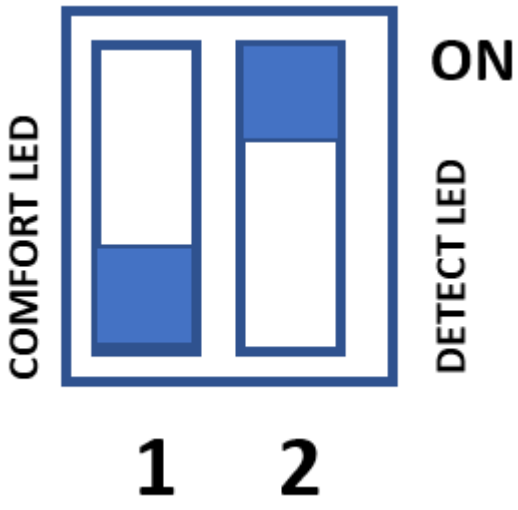

NOTE: Any selections made on the comfort and detection LED switches will be overridden when the RLED function is utilised.

6.0 Setting the shock sensitivity

- After powering up the device, single press the sensitivity button and the LED will flash blue **defaulting to sensitivity setting 2**.
- There are 5 sensitivity settings from 1 to 5 with 1 being the least sensitive (slowest flash rate) and 5 the most sensitive.
- With brand new High Sensitivity level. This is designed for customers wishing to pick up the smallest of vibrations. This will enhance the perimeter protection being installed on high security applications such as cash machines. This very high sensitivity setting is configured as level 5 on the shock sensor, the previous level 5 setting is now level 4, while level 4 has been removed. Devices with this functionality can be identified by the date code in the serial number which will be 2049 or later.
- Each press of the button will change the sensitivity indicated by the flash rate of the blue LED, cycling from slow to fast and finally back to slow after 5 presses.

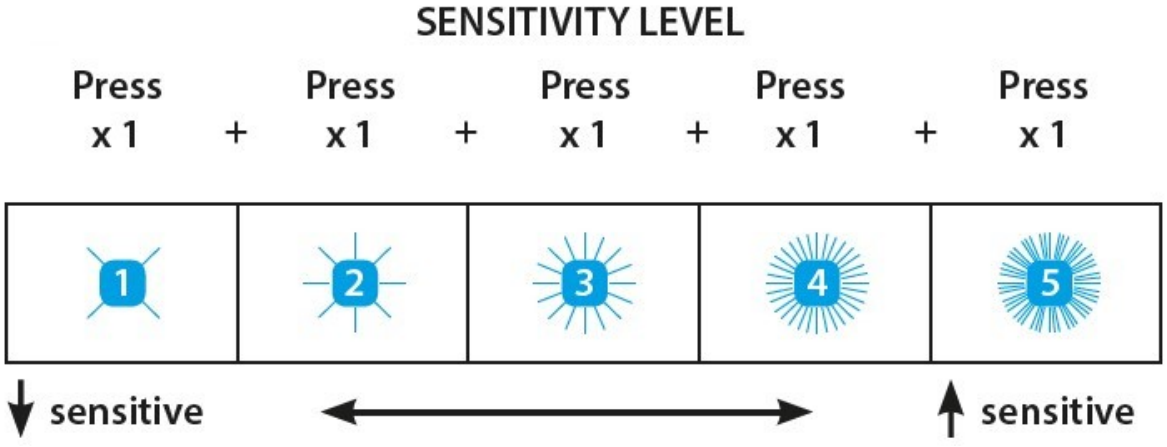

- **Before testing the device, press and hold the button (3 secs) to set the desired sensitivity setting.**
- The LED will turn green for confirmation at which point the device is ready for impact testing.
- On impact test, if the LED turns red, the selected sensitivity setting is appropriate for the installation.
- If the LED turns orange the selected sensitivity setting is too high for the

installation.

- If the LED turns green the selected sensitivity setting is too low for the installation.
- Select the next sensitivity level and repeat the test. Continue until a level is selected whereby the device LED turns red on impact.

Recommended Sensitivity Setting*	Material	Radius
1	Wood	1m
2	Framed Glass Window	1m
4	Concrete	0.5m

***Based on the testing requirements of EN50131-2-8 : 2016**

7.0 Specifications

Note: To be used with PSU’s that have a current limit of 5A or below.

Note: Product is designed for indoor use only.

Specifications	
Alarm System Impaq S & SC	EN50131-2-8:2017, EN50131-2-6:2008 (Impaq SC only) EN50131-1:2006+A2:2017, PD6662:2017, Grade 2 Class II
Alarm System Impaq S Grade 3	EN50131-2-8:2017 EN50131-1:2006+A2:2017, PD6662:2017, Grade 3 Class II
Operating Voltage	9-16V DC

Maximum Current	15.4mA
Quiescent Current	12.8mA
Relative Humidity	0 - 95% non-condensing
Operating Temperature	-10°C to 55°C
Weight	80g
Dimensions	86mm x 25mm x 21mm (magnet 57mm x 11.5mm)

8.0 Legal Information

Supplier: Texecom Ltd, Haslingden, Lancashire, BB4 4PW, UK.

Made in England

WEEE Directive: 2012/19/EU (WEEE Directive): Products marked with this symbol cannot be disposed of as unsorted municipal waste in the European Union. To recycle, return this product to your local supplier upon the purchase of equivalent new equipment, or dispose of it at designated collection points. For more information see: www.recyclethis.info.

Maintenance: Test yearly by the installer.

Warranty: 2 year replacement warranty.

As the Impaq S/SC and Impaq S Grade 3 is not a complete alarm system, but only a part thereof, Texecom cannot accept responsibility or liability for any damages whatsoever based on a claim that the Impaq S/SC and Impaq S Grade 3 failed to function correctly. Due to our policy of continuous improvement, Texecom reserves the right to change specification without prior notice.

Domestic Use: If this product is installed within reach of children the screw cover should not be fitted as this could cause a choking hazard.

Hereby, Texecom declares that the equipment type : AEJA0000 (Impaq S), AEKA0000 (Impaq SC), and AELA0000 (Impaq S Grade 3) are in compliance with the Electo-magnetic Compatibility (EMC) Directive 2014/30/EU.
The full EU declaration of conformity is available here: Impaq S, Impaq SC and Impaq S Grade 3

Certified by Telefication B.V.

